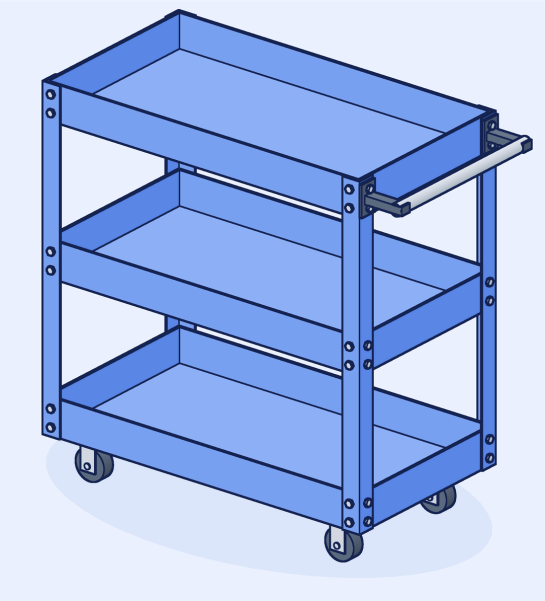

Industrial tool cart

3 shelves · Blue · Ref. LW-TC-01

Thank you for choosing Racks Point. Follow these six steps to assemble your cart.

DIMENSIONS (H × W × D)	MAXIMUM LOAD
73 × 66 × 36 cm	**50 kg per shelf, evenly distributed**
SHELVES	**REFERENCE**
3	**LW-TC-01**

Before you start

- Check against the parts list that nothing is missing from the box.
- Assemble the cart on a flat, clean surface.
- Do not fully tighten the bolts until step 5: this lets the parts settle without strain.

Parts

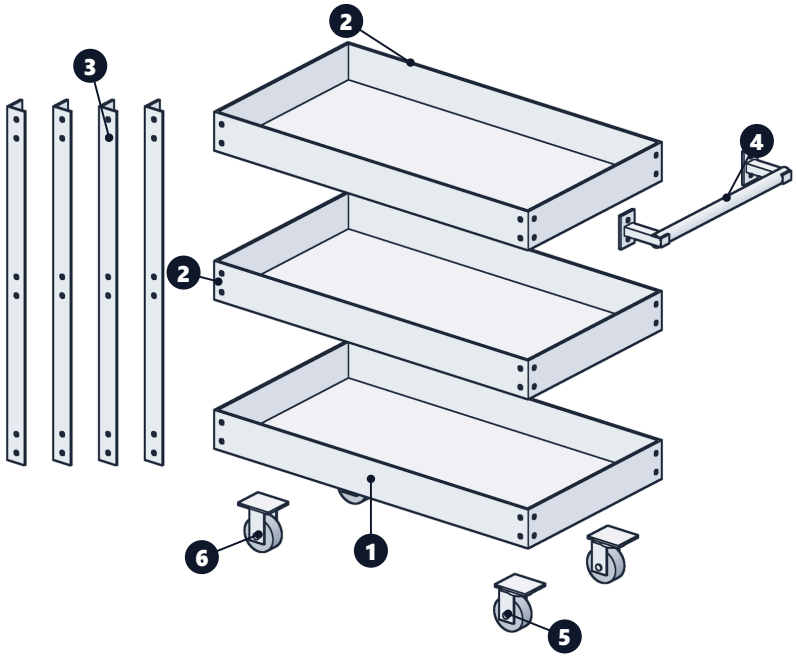

NO.	PART	QTY
1	Bottom shelf	× 1
2	Middle and top shelf	× 2
3	Corner support	× 4
4	Handle	× 1
5	Swivel castor	× 2
6	Fixed wheel	× 2

Hardware: 48 sets of bolt, nut and washer for the three shelves and 16 sets for the four wheels.

Step-by-step assembly

1

Bolt the four wheels to the bottom shelf **1**: the two swivel castors **5** at one end and the two fixed wheels **6** at the other. Each wheel takes four bolts.

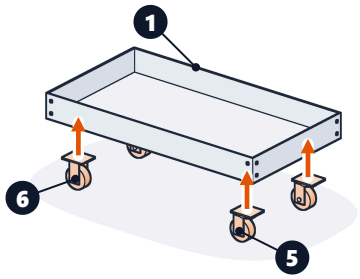

2

Bolt the four corner supports **3** to the corners of the bottom shelf, with four bolts per corner. Do not fully tighten them yet.

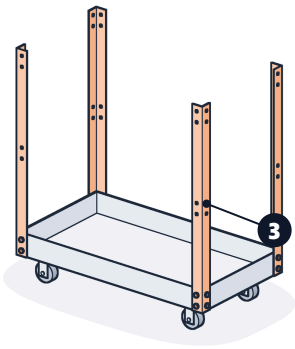

3

Fit one shelf **2** at mid height and bolt it to the four supports, again without fully tightening.

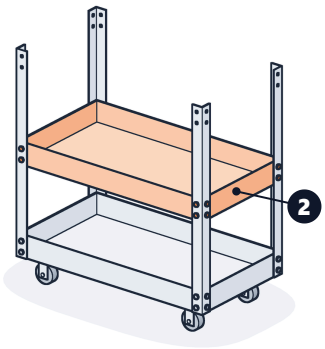

4

Fit the other shelf **2** at the top and bolt it loosely, **leaving out the four bolts at one end**: the same end as the swivel castors. Those holes are for the handle.

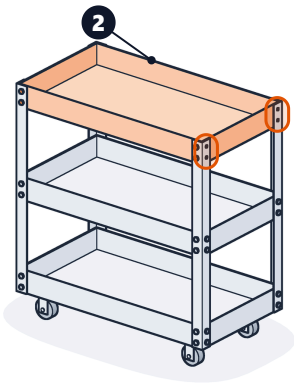

5

Gently move the assembly to and fro to check that no part is under stress or twisted. When it sits right, tighten all nuts and bolts.

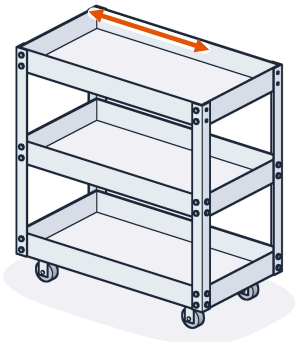

6

Bolt the handle **4** to the end of the top shelf using the four free holes: each bolt passes through the handle, the corner support and the shelf. Tighten the bolts. Your cart is ready to use.

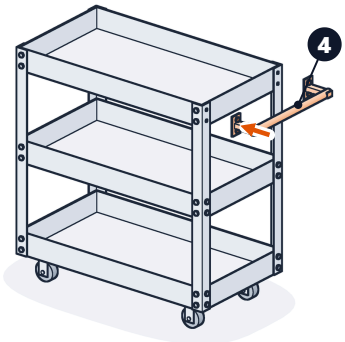

Any questions during assembly?
We're happy to help.

+34 960 320 268
info@rackspoint.com · rackspoint.com

